

DOBOT MG400

中国·深圳市越疆科技股份有限公司
SHENZHEN DOBOT CORP LTD
www.dobot-robots.com

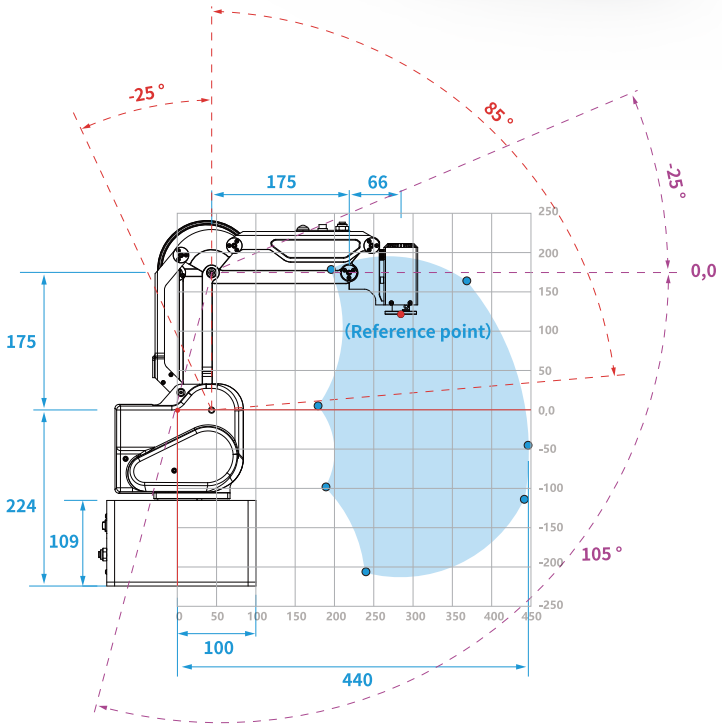

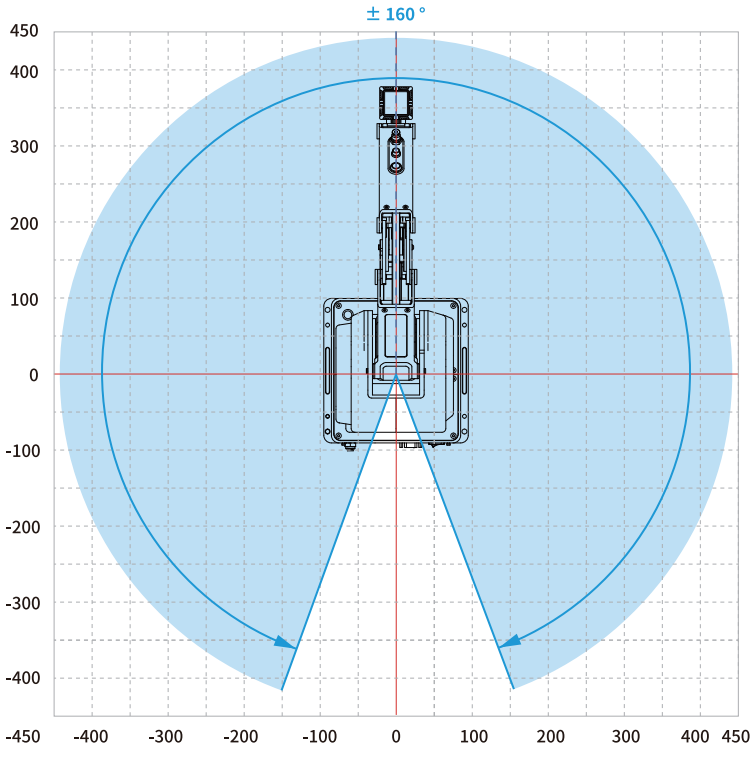

Product Name	DOBOT MG400		
Product Model	DT-MG400-4R075-01		
Controled Axes	4		
Rated Load	500 g (Max. 750 g)		
Max. Reach	440 mm		
Repeatibility	±0.05 mm		
Motion Parameters	Joint	Motion Range	Max. Speed
	J1	±160°	300 °/s
	J2	-25 ° ~ 85 °	300 °/s
	J3	-25 ° ~ 105 °	300 °/s
	J4	-360 ° ~ 360 °	300 °/s
Power Input	100~240 V AC, 50/60 Hz		
Rated Voltage	DC 48 V		
Rated Power	J1:75W, J2:50W, J3:50W, J4:30W		
Communication	TCP/IP, Modbus TCP		
Installation	Desktop		
Weight	8 kg		
Base Dimension	190 mm × 190 mm		
Working environment humidity	5%-85% relative humidity		
Storage humidity	≤95% relative humidity		
Software	DobotStudio 2020, SCStudio		

Interface

Base:	Digital Input	16
	Digital Output	16
	Ethernet	2
	USB 2.0	2
	Encoder Input	1
	Air way	1
End:	Digital Input	2
	Digital Output	2
	Air way	1

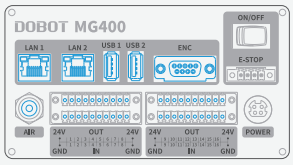



Mounting Drawing

